MIAMI-DADE COUNTY
PRODUCT CONTROL SECTION
11805 SW 26 Street, Room 208
Miami, Florida 33175-2474
T (786) 315-2590 F (786) 315-2599
www.miamidade.gov/economy

DEPARTMENT OF REGULATORY AND ECONOMIC RESOURCES (RER)
BOARD AND CODE ADMINISTRATION DIVISION

NOTICE OF ACCEPTANCE (NOA)

Quality Engineered Products Co., Inc.
4506 Quality Lane
Tampa, FL 33634

SCOPE:

This NOA is being issued under the applicable rules and regulations governing the use of construction materials. The documentation submitted has been reviewed and accepted by Miami-Dade County RER -Product Control Section to be used in Miami Dade County and other areas where allowed by the Authority Having Jurisdiction (AHJ).
This NOA shall not be valid after the expiration date stated below. The Miami-Dade County Product Control Section (In Miami Dade County) and/or the AHJ (in areas other than Miami Dade County) reserve the right to have this product or material tested for quality assurance purposes. If this product or material fails to perform in the accepted manner, the manufacturer will incur the expense of such testing and the AHJ may immediately revoke, modify, or suspend the use of such product or material within their jurisdiction. RER reserves the right to revoke this acceptance, if it is determined by Miami-Dade County Product Control Section that this product or material fails to meet the requirements of the applicable building code.
This product is approved as described herein and has been designed to comply with the Florida Building Code, including the High Velocity Hurricane Zone.

DESCRIPTION: Series"**16GACOSD-1**" Outswing 16 ga Flush Commercial Steel Doors w/wo Panic Exit Device-Impact

APPROVAL DOCUMENT: APPROVAL DOCUMENT: Drawing No. **16GACOSD-1 Rev #5**, titled "16 GA Commercial Outswing Steel Door", sheets 1 through 10 of 10, prepared by manufacturer, dated 05/25/04 and last revised on 03-03-21, signed and sealed by Cody Davis, P. E., bearing the Miami-Dade County Product Control Revision stamp with the Notice of Acceptance number and expiration date by the Miami-Dade County Product Control Section.

MISSILE IMPACT RATING: Large and Small Missile Impact Resistant

Limitations:

1. See Design Pressure Ratings VS lock types of Vs configurations in sheets **1**, **5** and **10**.
2. Double Door w/HCF 9300 Rim with 1300 removable mullion (sheet **5**) is rated at **+80/-65** PSF.
3. Doors are 16 ga (min .063" thk) with min CS Tensile yield strength Fy= 46.3 ksi and Tensile ultimate strength Fu= 52.1 Ksi and SS Tensile yield strength Fy= 50.5 ksi and Tensile ultimate strength Fu= 98.5 Ks
4. EPS Polystyrene by Dyplast (former Apache Products), having current NOA.

LABELING: Each unit shall bear a permanent label with the manufacturer's name or logo, city, state and series and following statement: "Miami-Dade County Product Control Approved", noted herein.

RENEWAL of this NOA shall be considered after a renewal application has been filed and there has been no change in the applicable building code negatively affecting the performance of this product.

TERMINATION of this NOA will occur after the expiration date or if there has been a revision or change in the materials, use, and/or manufacture of the product or process. Misuse of this NOA as an endorsement of any product, for sales, advertising or any other purposes shall automatically terminate this NOA. Failure to comply with any section of this NOA shall be cause for termination and removal of NOA.

ADVERTISEMENT: The NOA number preceded by the words Miami-Dade County, Florida, and followed by the expiration date may be displayed in advertising literature. If any portion of the NOA is displayed, then it shall be done in its entirety.

INSPECTION: A copy of this entire NOA shall be provided to the user by the manufacturer or its distributors and shall be available for inspection at the job site at the request of the Building Official.
This NOA **revises NOA # 19-0507.03** and consists of this page 1 and evidence pages E-1, E-2, E-3 & E-4, as well as approval document mentioned above.
The submitted documentation was reviewed by **Ishaq I. Chanda, P.E.**

MIAMI-DADE COUNTY APPROVED

Ishaq I. Chanda

NOA No. 20-1123.17
Expiration Date: January 30, 2024
Approval Date: April 01, 2021

NOTICE OF ACCEPTANCE: EVIDENCE SUBMITTED

1. Evidence submitted under previous approvals

A. DRAWINGS

1. Manufacturer's die drawings and sections (Submitted under files below)
2. Drawing No. 16GACOSD-1, titled "16 GA Commercial Outswing Steel Door", sheets 1 through 10 of 10, prepared by manufacturer, dated 02/26/16, with Revision 4 dated 02/26/16, signed and sealed by Cody Davis, P. E.

B. TESTS (Submitted under file # **07-1017.09/04-0220.02)**

1. Test reports on 1) Air Infiltration Test, per FBC TAS 202-94
   2) Uniform Static Air Pressure Test, Loading per FBC, TAS 202.
   3) Water Resistance Test per FBC, TAS 202-94.
   4) Large Missile Impact Test per FBC, TAS 201-94
   5) Cyclic Wind Pressure Loading per FBC, TAS 203-94

Along with marked-up drawings & installation diagram of Commercial Steel Doors w /Panic devices, prepared by Certified Testing Laboratories Inc., Test Report No. **CTLA 1276W,** dated Nov. 11, 2004, signed and sealed by Ramesh Patel, P. E. (Note: This test report has been revised under Test Report No. **CTLA 1276WR,** re-issued on Feb 01, 2005 by Certified Testing Laboratories, signed and sealed by Ramesh Patel, P. E.)

Note: Additional addendum letter dated OCT 10th, 2015 by Certified Testing Lab, issued to test report CTLA 1276W-R, signed by Ramesh Patel, P.E.

2. Test reports (Transferred from file # **04-0220.02)**
   1) Air Infiltration Test, per FBC TAS 202-94
   2) Uniform Static Air Pressure Test, Loading per FBC, TAS 202.
   3) Water Resistance Test per FBC, TAS 202-94.
   4) Large Missile Impact Test per FBC, TAS 201-94
   5) Cyclic Wind Pressure Loading per FBC, TAS 203-94
   6) Forced Entry Test, per FBC and TAS 202-94

Along with marked-up drawings and installation diagram of Steel Commercial Steel Doors, prepared by Certified Testing Laboratories Inc., Test Report No. **CTLA 114W,** dated December 09, 2003, signed and sealed by Ramesh Patel, P. E.

(Note: This test report has been revised by addendum letter dated May 26, 2004 & June 30, 2005, issued by Certified Testing Laboratories Inc.).

Along with marked-up drawings and installation diagram of Steel Commercial Doors, prepared by Certified Testing Laboratories Inc., Test Report No. **CTLA 403W,** dated 07/25/00, signed and sealed by Ramesh Patel, P. E

3. Additional test report **HTL-0050-1012-97** tested per FBC, TAS 202-94, issued by Hurricane testing laboratories, Inc. dated 10-16-98, signed and sealed by Timothy S. Marshall, P. E. (Transferred from file # 04-0220.02)

C. CALCULATIONS

1. Anchor verification calculations, dated 10/20/15 and revised on 05/31/16, prepared, signed and sealed Cody Davis, P.E.

Ishaq I. Chanda

Ishaq I. Chanda, P.E.
Product Control Unit Supervisor
NOA No. 20-1123.17
Expiration Date: January 30, 2024
Approval Date: April 01, 2021

NOTICE OF ACCEPTANCE: EVIDENCE SUBMITTED

D. QUALITY ASSURANCE

1 Miami Dade Department of Regulatory and Economic Resources (RER)

E. MATERIAL CERTIFICATIONS (Submitted under file # **07-1017.09/#04-0823.05)**

1. Tensile test report prepared by Certified Testing Laboratories Inc., Test Report No. **CTL 1023J (CTLA114W),** tested per ASTM E-A370-97, dated December 02,2003, signed and sealed by Ramesh Patel, P. E.
2. Notice of Acceptance No. **11-0926.07** issued to Dyplastic Products, LLC (former Apache Products Co) for "EPS-Expanded Polystyrene Insulation", expiring on 01/11/2017.

F. STATEMENTS

1. Statement letter of conformance to FBC 2014 (5th Edition) and "no financial interest", issued, prepared, signed, sealed and dated 05/31/16 by Cody Davis, P. E.
2. Statement letter dated 05/31/16 of successor engineer adopting as his own, another engineer's work per FAC, Rule Chapter 61G15-27, issued by Master Consulting Engineers, Inc., both signed and sealed by Cody Davis, P. E
3. Statement letter of compliance, as a part of the above referenced test reports.

G. OTHER

1. This **revises NOA # 12-0921.12**, expiring January 30, 2018
2. Previous associated files with this NOA(s) are # **07-1017.09, 04-0220.02 & # 02-1011.05.**
3. Test Proposal by Q. E. P. dated September 19, 2002, approved by BCCO.

2. Evidence submitted under file #17-1102.02.

A. DRAWINGS

1. Drawing No. **16GACOSD-1**, titled "16 GA Commercial Outswing Steel Door", sheets 1 through 10 of 10, prepared by manufacturer, dated 05/25/04 and last revised on 07/08/2016, signed and sealed by Cody Davis, P. E.

B. Test

1. None.

C. CALCULATIONS

1. None.

D. QUALITY ASSURANCE

1. Miami Dade Department of Regulatory and Economic Resources (RER).

E. MATERIAL CERTIFICATIONS

1. Notice of Acceptance No. **17-1207.05** issued to Dyplastic Products, LLC (former Apache Products Co) for "E& R-Board Expanded Polystyrene Rigid Foam Insulation", expiring on 01/11/2022.

F. STATEMENTS

1. Statement letter of conformance to FBC 2017 (**6th** Edition), dated 12/01/17, prepared by Master Consulting Engineer Inc., signed and sealed by Cody Davis, P. E.
2. Statement later issued by Quality Engineered Prod., dated 02/02/18, requesting one year renewal, subjected to verification test completion per RER e-mail dated Jan o9, 2019, signed by A. Bernstein, V.P.

Ishaq I. Chanda

Ishaq I. Chanda, P.E.
Product Control Unit Supervisor
NOA No. 20-1123.17
Expiration Date: January 30, 2024
Approval Date: April 01, 2021

NOTICE OF ACCEPTANCE: EVIDENCE SUBMITTED

G. OTHER

1. This NOA conditionally **renews** for **one** year **# 15-0422.03**, expiring 01/30/19, subjected verification test (glazing/hardware), as laid out per RER e-mail dated JAN 09, 2018.

3. Evidence submitted under previous submittal

A. DRAWINGS

1. Drawing No. **16GACOSD-1**, titled "16 GA Commercial Outswing Steel Door", sheets 1 through 10 of 10, prepared by manufacturer, dated 05/25/04 and last revised on 04-30-19, signed and sealed by Cody Davis, P. E.

B. TESTS

1. Test reports on
   1) Uniform Static Air Pressure Test, Loading per FBC, TAS 202.
   2) Water Resistance Test per FBC, TAS 202-94.
   3) Large Missile Impact Test per FBC, TAS 201-94
   4) Cyclic Wind Pressure Loading per FBC, TAS 203-94

Along with marked-up drawings and installation diagram of glazed outswing Steel Commercial Steel Doors, prepared by Fenestration Testing Laboratories Inc., Test Report No. **FTLA 1435,** dated April 14, 2019, signed and sealed by Idalmis Ortega, P. E.

C. CALCULATIONS

1. None.

D. QUALITY ASSURANCE

1. Miami Dade Department of Regulatory and Economic Resources (RER).

E. MATERIAL CERTIFICATIONS

1. Notice of Acceptance No. **17-1207.05** issued to Dyplastic Products, LLC (former Apache Products Co) for "E& R-Board Expanded Polystyrene Rigid Foam Insulation", expiring on 01/11/2022.

F. STATEMENTS (Submitted under file **#17-1102.02)**

1. Statement letter of conformance to FBC 2017 (**6th** Edition), dated 12/01/17, prepared by Master Consulting Engineer Inc., signed and sealed by Cody Davis, P. E.

G. OTHER

1. This NOA **revises** & **renews NOA # 17-1102.02,** expiring 01/30/24.
2. RER e-mail test proposal dated Jan 09, 2018.

Ishaq I. Chanda

Ishaq I. Chanda, P.E.
Product Control Unit Supervisor
NOA No. 20-1123.17
Expiration Date: January 30, 2024
Approval Date: April 01, 2021

NOTICE OF ACCEPTANCE: EVIDENCE SUBMITTED

4. New Evidence submitted

A. DRAWINGS

1. Drawing No. **16GACOSD-1 Rev #5**, titled "16 GA Commercial Outswing Steel Door", sheets 1 through 10 of 10, prepared by manufacturer, dated 05/25/04 and last revised on 03-03-21, signed and sealed by Cody Davis, P. E.

B. TESTS

1. None.

C. CALCULATIONS

1. None.

D. QUALITY ASSURANCE

1. Miami Dade Department of Regulatory and Economic Resources (RER).

E. MATERIAL CERTIFICATIONS

1. Notice of Acceptance No. **17-1207.05** issued to Dyplastic Products, LLC (former Apache Products Co) for "E& R-Board Expanded Polystyrene Rigid Foam Insulation", expiring on 01/11/2022.

F. STATEMENTS

1. Statement letter of conformance to FBC 2020 (7th Edition), dated 03/03/21, prepared by Master Consulting Engineer Inc., signed and sealed by Cody Davis, P. E.

G. OTHER

1. This NOA **revises NOA # 19-0507.03,** expiring 01/30/24.

Ishaq I. Chanda

Ishaq I. Chanda, P.E.
Product Control Unit Supervisor
NOA No. 20-1123.17
Expiration Date: January 30, 2024
Approval Date: April 01, 2021

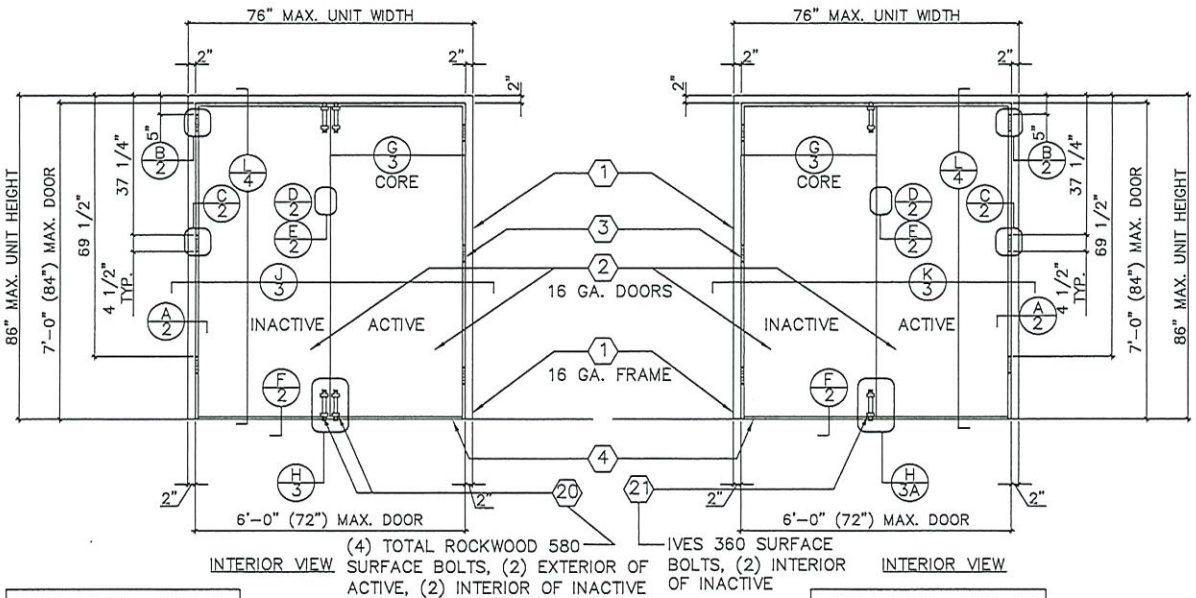

PRODUCT REVISED
as complying with the Florida Building Code
NOA-No. 20-1123.17
Expiration Date 01/30/2024
By Ishay I. Chanin
Miami-Dade Product Control

COMPLIANCE OF THESE UNITS TO FBC EGRESS/ESCAPE REQUIREMENTS TO BE REVIEWED BY BUILDING OFFICIAL ON A CASE BY CASE BASIS

LOCK TESTED: ITEM #9

PDQ MORTISE LOCK MODEL MR117

DESIGN PRESSURE RATING (OUTSWING DOUBLE DOORS) w/(4) ROCKWOOD SURFACE BOLTS

	WHERE WATER INFILTRATION REQUIREMENT IS NEEDED *	WHERE WATER INFILTRATION REQUIREMENT IS NOT NEEDED OR PROTECTED BY OVERHANG*
POSITIVE	NOT APPROVED WITHOUT OVERHANG *	+90 PSF
NEGATIVE	NOT APPROVED WITHOUT OVERHANG *	−90 PSF

* UNIT SHALL BE INSTALLED AT LOCATION PROTECTED BY OVERHANG SUCH THAT OVERHANG RATIO (OH) = OH LENGTH/OH HEIGHT IS GREATER THAN 1

LOCK TESTED: ITEM #22

SCHLAGE MORTISE LOCK MODEL L9453P
SARGENT MORTISE LOCK MODEL 8225NL

DESIGN PRESSURE RATING (OUTSWING DOUBLE DOORS) w/(2) IVES SURFACE BOLTS (INACTIVE DOOR LEAF)

	WHERE WATER INFILTRATION REQUIREMENT IS NEEDED *	WHERE WATER INFILTRATION REQUIREMENT IS NOT NEEDED OR PROTECTED BY OVERHANG*
POSITIVE	NOT APPROVED WITHOUT OVERHANG *	+70 PSF
NEGATIVE	NOT APPROVED WITHOUT OVERHANG *	−70 PSF

* UNIT SHALL BE INSTALLED AT LOCATION PROTECTED BY OVERHANG SUCH THAT OVERHANG RATIO (OH) = OH LENGTH/OH HEIGHT IS GREATER THAN 1

CODY L. DAVIS
LICENSE No. 75154
STATE OF FLORIDA
3/3/21
PROFESSIONAL ENGINEER
CODY L. DAVIS, P.E.
FLORIDA LIC. # 75154
(NOT VALID WITHOUT SEAL)

16 GA. COMMERCIAL OUTSWING STEEL DOOR

DRAWING NUMBER 16GACOSD-1

4506 QUALITY LANE
TAMPA, FLORIDA 33634
(813) 885-1693

Quality Engineered Products Co., Inc.

REVISIONS
1 05-25-04
2 07-06-04
3 01-26-06
4 02-26-16
5 02-15-21(FBC2020)

HURRICANE TEST APPROVAL
SERIES 16GACOSD
16 GAUGE COMMERCIAL
OUTSWING STEEL DOORS

SHEET 1 OF 10

DATE 02-15-21

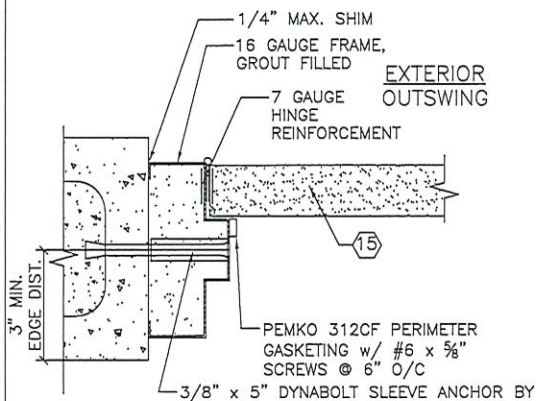

A2

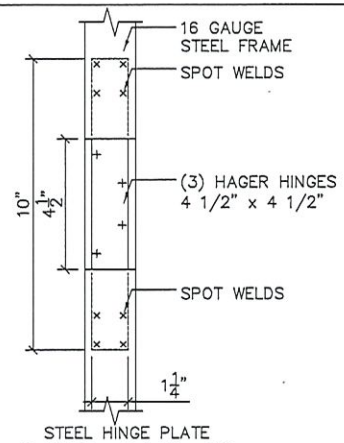

STEEL HINGE PLATE
7 GAUGE x 1 1/4" x 10"
FRAME HINGE REINFORCEMENT

B2

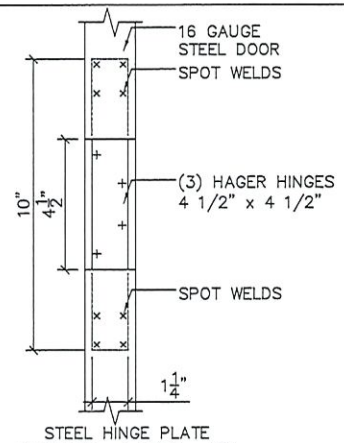

STEEL HINGE PLATE
7 GAUGE x 1 1/4" x 10"
DOOR HINGE REINFORCEMENT

C2

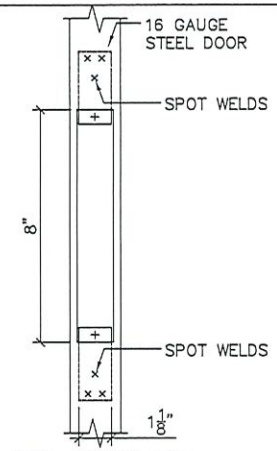

STEEL MORTISE LOCK
REINFORCEMENT
12 GAUGE x 1⅛" x 2½"

D2

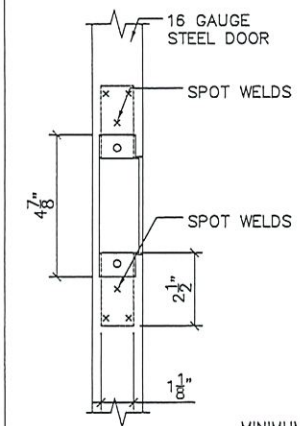

STEEL ASA STRIKE
REINFORCEMENT
12 GAUGE x 1⅛" x 2½"

E2

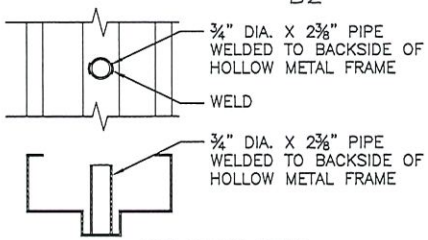

PIPE SLEEVE DETAIL

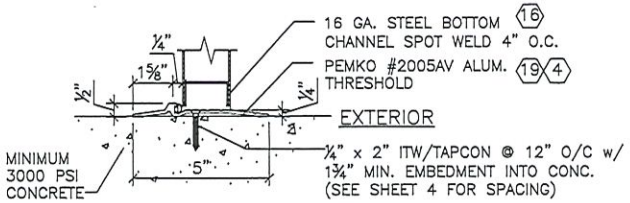

THRESHOLD INSTALLATION

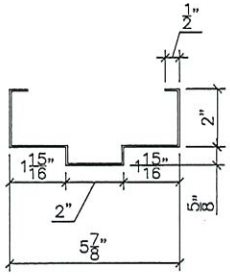

16 GAUGE FRAME PROFILE

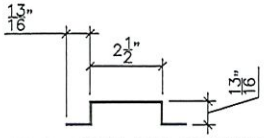

20 GA. STEEL HAT STIFFENER
SPOT WELD 6" O.C.
FULL HEIGHT OF DOOR.

PRODUCT REVISED
as complying with the Florida Building Code
NOA-No. 20-1123.17
Expiration Date 01/30/2024
By Ishwar I. Chandra
Miami-Dade Product Control

CODY C. DAVIS
LICENSE
No. 75154
STATE OF FLORIDA
3/3/21
PROFESSIONAL ENGINEER

CODY DAVIS, P.E.
FLORIDA LIC. # 75154
(NOT VALID WITHOUT SEAL)

16 GA. COMMERCIAL OUTSWING STEEL DOOR

4506 QUALITY LANE
TAMPA, FLORIDA 33634
(813) 885-1693

Quality Engineered Products Co., Inc.

REVISIONS
1 –
2 –
3 3-01-26-06
4 02-26-16
5 02-15-21 (FBC2020)

DRAWING NUMBER 16GACOSD-1

HURRICANE TEST APPROVAL
SERIES 16GACOSD
16 GAUGE COMMERCIAL
OUTSWING STEEL DOORS

SHEET 2 OF 10

DATE 02-15-21

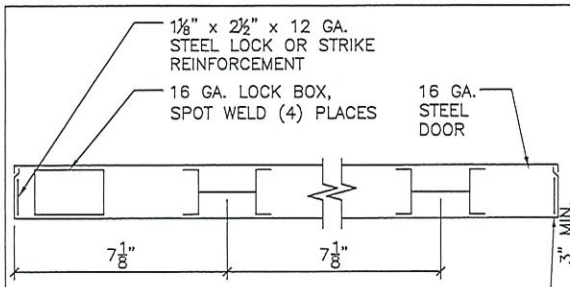

STEEL RIB CORE

G3

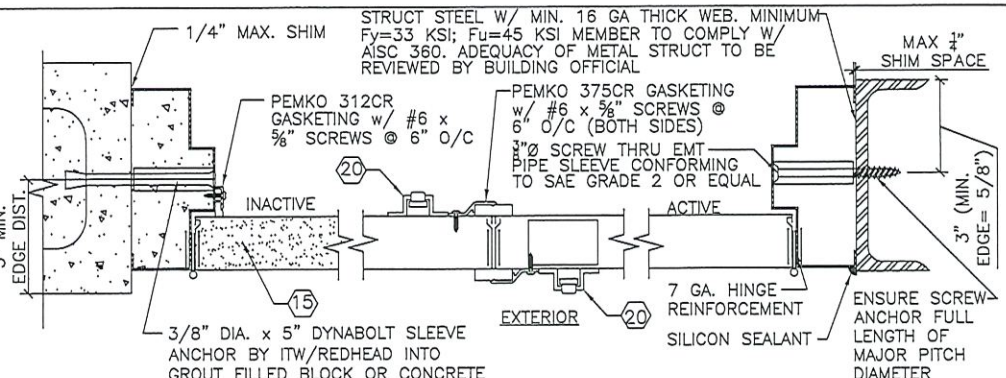

J3

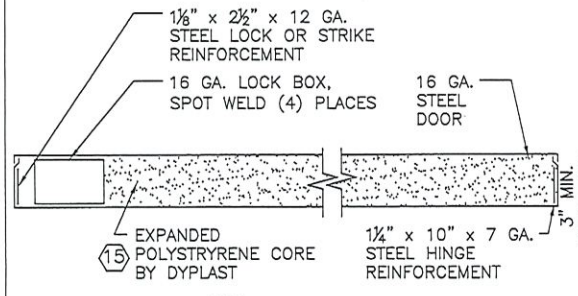

G3

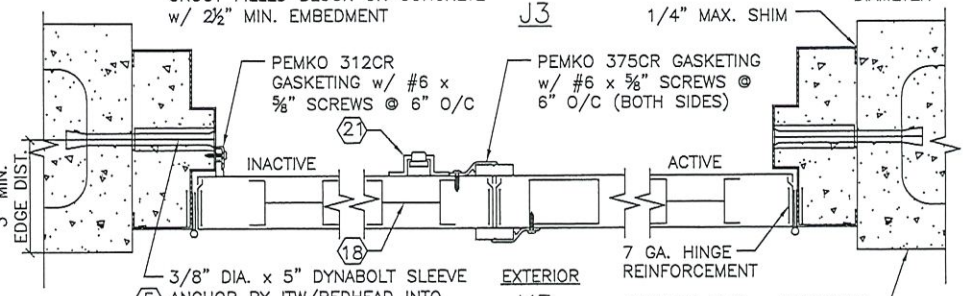

K3

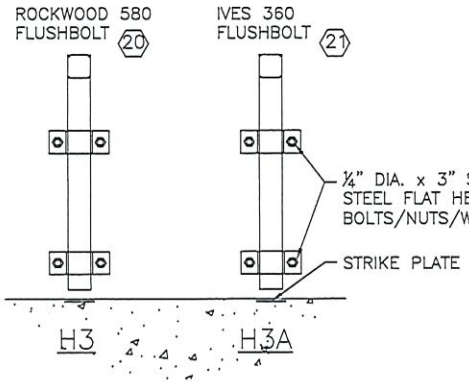

H3 H3A

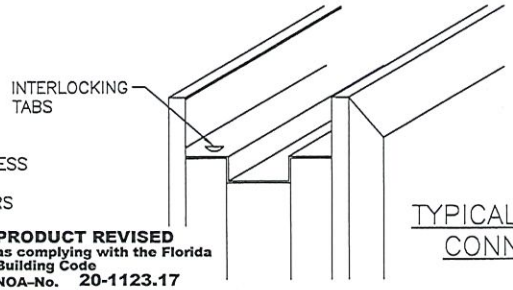

TYPICAL CORNER CONNECTION

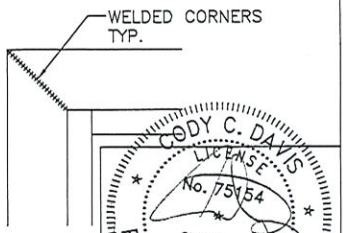

PRODUCT REVISED
as complying with the Florida Building Code
NOA-No. 20-1123.17
Expiration Date 01/30/2024
By Ishay I. Chanin
Miami-Dade Product Control

CODY C. DAVIS LICENSE No. 75154 STATE OF FLORIDA PROFESSIONAL ENGINEER 3/3/21

CODY DAVIS, P.E.
FLORIDA LIC. # 75154
(NOT VALID WITHOUT SEAL)

16 GA. COMMERCIAL OUTSWING STEEL DOOR

4506 QUALITY LANE
TAMPA, FLORIDA 33634
(813) 885-1693

Quality Engineered Products Co., Inc.

REVISIONS	
–	–
3	01-26-06
4	02-26-16
5	02-15-21(FBC2020)

DRAWING NUMBER 16GACOSD-1

HURRICANE TEST APPROVAL
SERIES 16GACOSD
16 GAUGE COMMERCIAL
OUTSWING STEEL DOORS

SHEET 3 OF 10

DATE 02-15-21

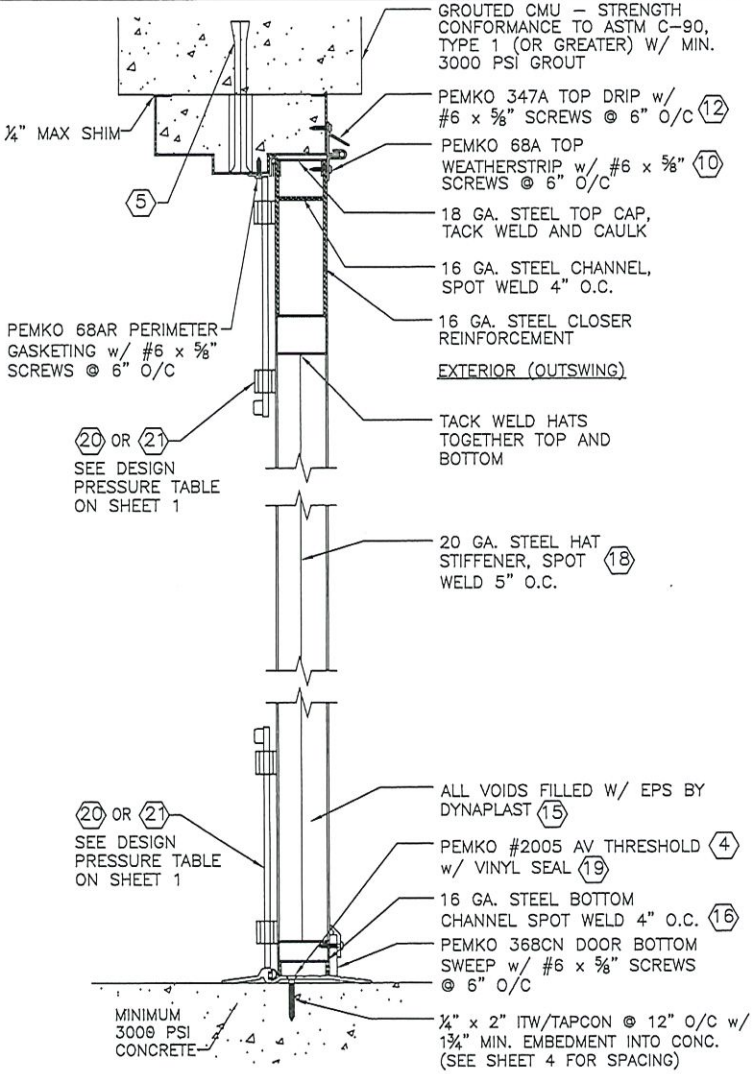

VERTICAL SECTION L4

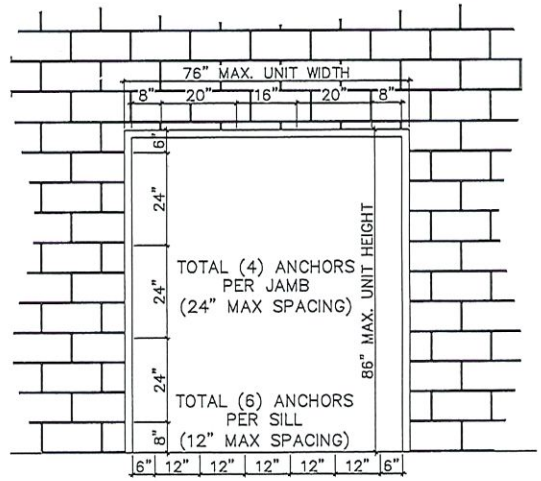

ANCHOR LOCATION INSTALLATION INTO NEW CONCRETE/ MASONRY (GROUT FILLED BLOCK)

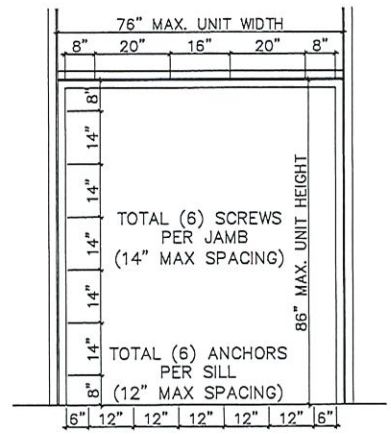

ANCHOR LOCATION INSTALLATION INTO STRUCTURAL STEEL

PRODUCT REVISED
as complying with the Florida Building Code
NOA-No. 20-1123.17
Expiration Date 01/30/2024
By Ishwar L. Chandra
Miami-Dade Product Control

CODY C. DAVIS
LICENSE No. 75154
STATE OF FLORIDA
PROFESSIONAL ENGINEER
3/3/21

CODY C. DAVIS, P.E.
FLORIDA LIC. # 75154
(NOT VALID WITHOUT SEAL)

16 GA. COMMERCIAL OUTSWING STEEL DOOR

4506 QUALITY LANE
TAMPA, FLORIDA 33634
(813) 885-1693

Quality Engineered Products Co., Inc.

REVISIONS	
–	–
3	01-26-06
4	02-26-16
5	02-15-21(FBC2020)

DRAWING NUMBER 16GACOSD-1

HURRICANE TEST APPROVAL
SERIES 16GACOSD
16 GAUGE COMMERCIAL
OUTSWING STEEL DOORS

SHEET 4 OF 10

DATE 02-15-21

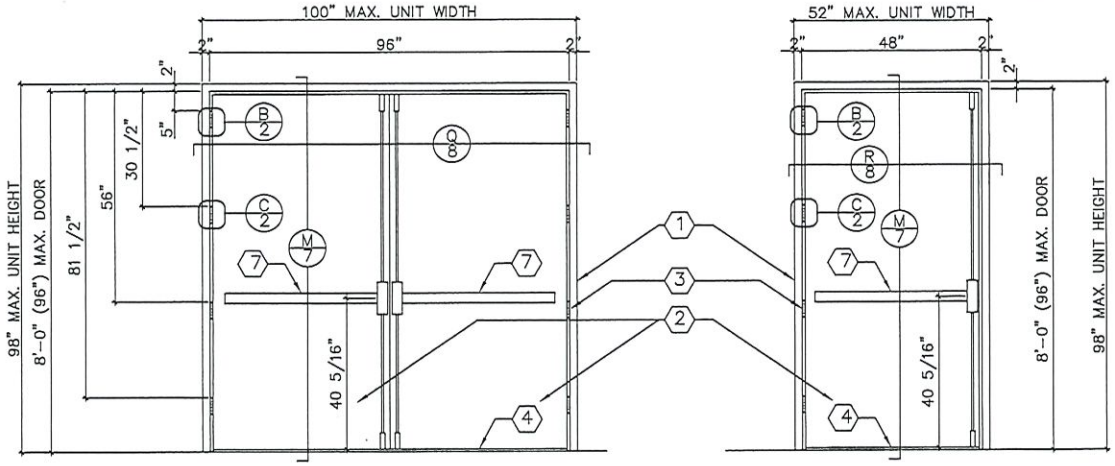

DOUBLE OUTSWING DOOR (INTERIOR VIEW)
w/ DORMA'S HCF 9400 VERTICAL ROD PANIC DEVICE

SINGLE OUTSWING DOOR (INTERIOR VIEW)
w/ DORMA'S HCF 9400 VERTICAL ROD PANIC DEVICE

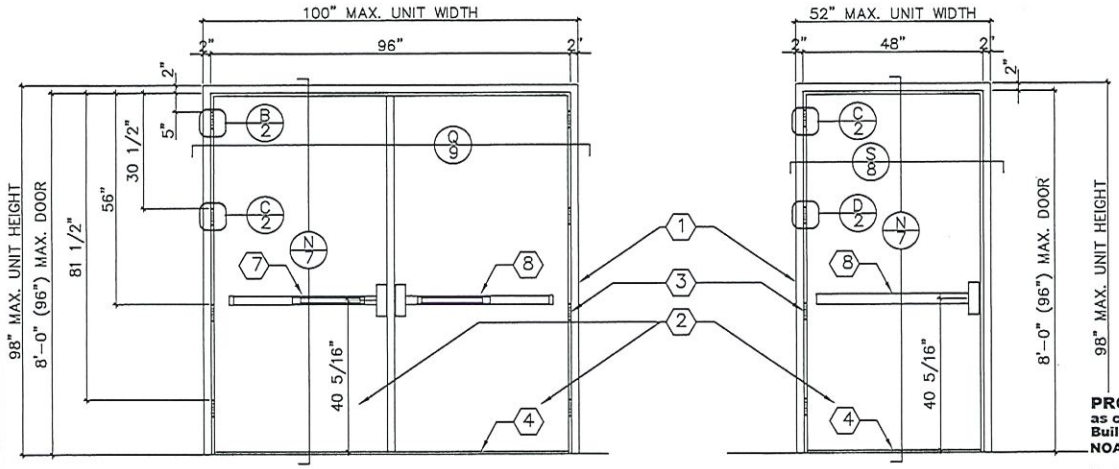

DOUBLE OUTSWING DOOR (INTERIOR VIEW)
w/ DORMA'S HCF 9300 RIM EXIT DEVICE & 1300
REMOVABLE MULLION w/ 416 STRIKE PLATE

SINGLE OUTSWING DOOR (INTERIOR VIEW)
w/ DORMA'S HCF 9300 RIM EXIT DEVICE
w/ 416 STRIKE PLATE

FOR SINGLE DOOR WITH DORMA 9300 DEVICE
DESIGN PRESSURE RATING

	WHERE AIR & WATER INFILTRATION REQUIREMENT IS NEEDED	WHERE AIR & WATER INFILTRATION REQUIREMENT IS NOT NEEDED
POSITIVE	+80 PSF	+80 PSF
NEGATIVE	−80 PSF	−80 PSF

FOR DORMA VERTICAL ROD DEVICES
DESIGN PRESSURE RATING

	WHERE AIR & WATER INFILTRATION REQUIREMENT IS NEEDED	WHERE AIR & WATER INFILTRATION REQUIREMENT IS NOT NEEDED
POSITIVE	+80 PSF	+80 PSF
NEGATIVE	−80 PSF	−80 PSF

FOR DORMA RIM DEVICES WITH HC1300 MULLION
DESIGN PRESSURE RATING

	WHERE AIR & WATER INFILTRATION REQUIREMENT IS NEEDED	WHERE AIR & WATER INFILTRATION REQUIREMENT IS NOT NEEDED
POSITIVE	+80 PSF	+80 PSF
NEGATIVE	−65 PSF	−65 PSF

PRODUCT REVISED
as complying with the Florida Building Code
NOA-No. 20-1123.17
Expiration Date 01/30/2024
By Ishaq I. Chanda
Miami-Dade Product Control

CODY C. DAVIS
LICENSE
No. 75154
STATE OF FLORIDA
3/3/21
PROFESSIONAL ENGINEER

CODY DAVIS, P.E.
FLORIDA LIC. # 75154
(NOT VALID WITHOUT SEAL)

16 GA. COMMERCIAL OUTSWING STEEL DOOR

4506 QUALITY LANE
TAMPA, FLORIDA 33634
(813) 885-1693

Quality Engineered Products Co., Inc.

REVISIONS
- –
- –
3 01-26-06
4 02-26-16
5 02-15-21(FBC2020)

DRAWING NUMBER 16GACOSD-1

HURRICANE TEST APPROVAL
SERIES 16GACOSD
16 GAUGE COMMERCIAL
OUTSWING STEEL DOORS

SHEET 5 OF 10

DATE 02-15-21

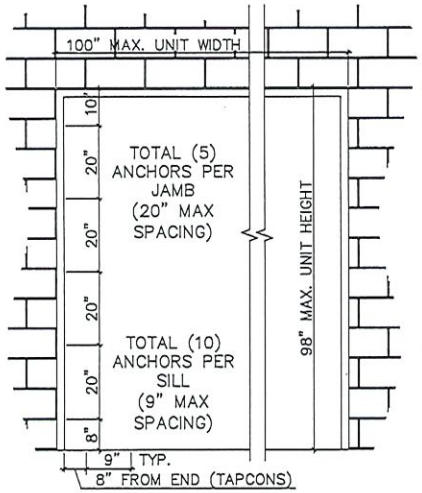

½"ø DYNABOLT SLEEVE ANCHOR
ANCHOR LOCATION INSTALLATION INTO NEW CONCRETE/MASONRY (GROUT FILLED BLOCK)

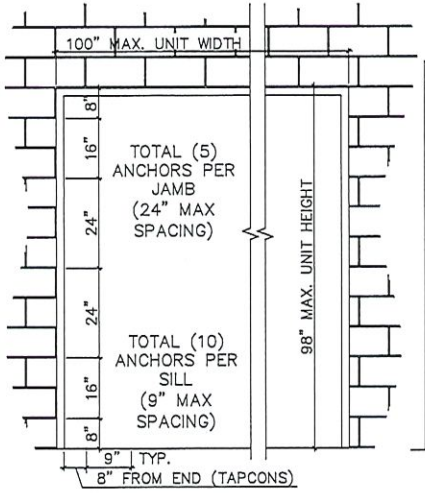

16 GA. T-ANCHOR
ANCHOR LOCATION INSTALLATION INTO NEW MASONRY (GROUT FILLED BLOCK)

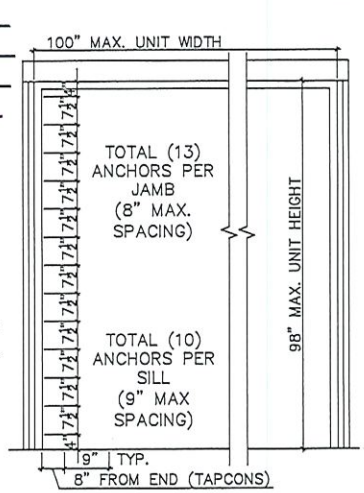

3/8" LAG SCREWS
ANCHOR LOCATION INSTALLATION INTO WOOD STRUCTURE

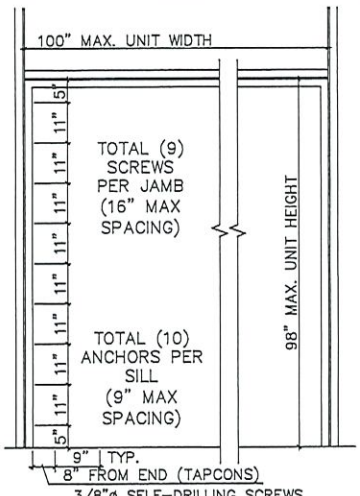

3/8"ø SELF-DRILLING SCREWS THRU EMT PIPE
ANCHOR LOCATION INSTALLATION INTO STRUCTURAL STEEL

ITEM #	QUANTITY	BILL OF MATERIALS
1	1	16 GA. (.063") MIN. (14 GA. MAX.) STEEL HOLLOW METAL FRAME FyMIN= 46.3 KSI; FuMIN= 52.1 KSI (OR S.S. MEETING FyMIN= 50.5 KSI; FuMIN= 98.5 KSI)
2	2	16 GA. (.063") MIN. (14 GA. MAX.) GLAZED STEEL STORE FyMIN= 46.3 KSI; FuMIN= 52.1 KSI (OR S.S. MEETING FyMIN= 50.5 KSI; FuMIN= 98.5 KSI)
3	8	HAGAR HINGES BB1279 4½" x 4½" x 0.134" THICK
4	1	PEMKO 2005AV THRESHOLD
5	15	½"Ø DYNABOLT ITW/REDHEAD SLEEVE ANCHOR (⅜"Ø BOLT) X 5" SLEEVE ANCHOR w/ ¾"Ø EMT WELDED PIPE SLEEVE w/ 2-1/2" MIN. EMBEDMENT & 3" MIN. EDGE DISTANCE INTO 3 KSI CONCRETE OR GROUT FILLED BLOCK
6	20	½" x 6" WOOD LAG SCREWS w/ ¾" EMT PIPE SLEEVE
7	2	DORMA EXIT DEVICE HCF9400 VERTICAL ROD EXIT DEVICE w/ STRIKEPLATES TOP AND BOTTOM
8	2	DORMA EXIT DEVICE HCF9300 RIM EXIT DEVICE w/ STRIKE PLATES (416)
9	1	PDQ MORTISE LOCK MR117
10	1	PEMKO 68A DOOR TOP WEATHERSTRIP w/ #6 x ⅝" SCREWS
11	AS REQ.	NATIONAL GAURD #130SA WEATHERSTRIP w/ #6 x ⅝" SCREWS
12	1	PEMKO 347A TOP DRIP
13	8	7 GA. STEEL DOOR HINGE REINFORCEMENT

ITEM #	QUANTITY	BILL OF MATERIALS
14	8	7 GA. STEEL FRAME HINGE REINFORCEMENT
15	AS REQ.	EXPANDED POLYSTYRENE (EPS) BY DYPLAST w/ CURRENT NOA PRODUCTS OR 20 GA. STEEL RIB OR HONEYCOMB
16	4	16 GA. STEEL TOP AND BOTTOM "U" CHANNEL
17	2	12 GA. STEEL 1.5" x 4.5" x FULL LENGTH LOCK REINFORCEMENT
18	AS REQ.	20 GA. STEEL HAT STIFFENERS
19	1	VINYL GASKETING (THRESHOLD)
20	1	ROCKWOOD 580 SURFACE BOLTS
21	1	IVES 360 SURFACE BOLTS
22	1	SCHLAGE MORTISE LOCK MODEL L9453P, SARGENT MORTISE LOCK MODEL 8225NL (70 PSF ONLY)
23	1	DORMA HC1300 REMOVABLE MULLION (DOUBLE DOORS)

PRODUCT REVISED
as complying with the Florida Building Code
NOA-No. 20-1123.17
Expiration Date 01/30/2024
By Ishwar I. Chandu
Miami-Dade Product Control

CODY C. DAVIS
LICENSE
No. 75154
STATE OF FLORIDA
3/3/21
PROFESSIONAL ENGINEER

CODY DAVIS, P.E.
FLORIDA LIC. # 75154
(NOT VALID WITHOUT SEAL)

16 GA. COMMERCIAL OUTSWING STEEL DOOR

4506 QUALITY LANE
TAMPA, FLORIDA 33634
(813) 885-1693

Quality Engineered Products Co., Inc.

REVISIONS
- -
- -
3 01-26-06
4 02-26-16
5 02-15-21(FBC2020)

DRAWING NUMBER 16GACOSD-1

HURRICANE TEST APPROVAL
SERIES 16GACOSD
16 GAUGE COMMERCIAL
OUTSWING STEEL DOORS

SHEET 6 OF 10

DATE 02-15-21

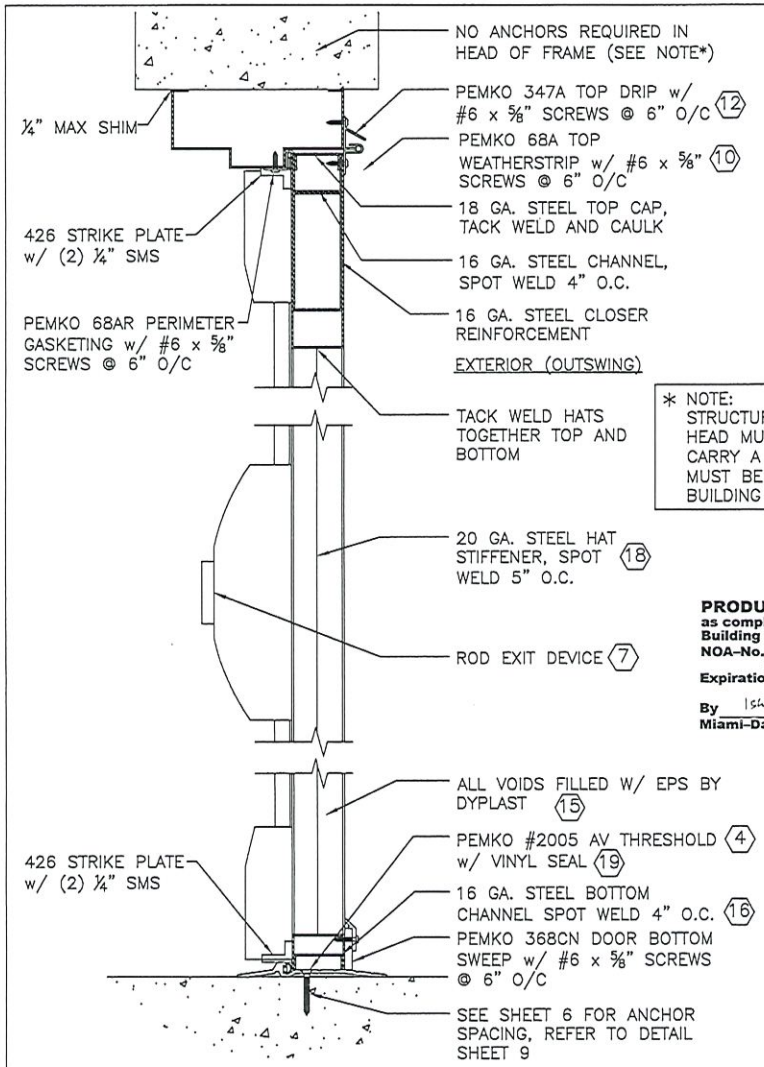

VERTICAL SECTION M7

* NOTE:
STRUCTURE MEMBER AT THE HEAD MUST BE DESIGNED TO CARRY A 75#/FT LOAD AND MUST BE REVIEWED BY THE BUILDING OFFICIAL.

PRODUCT REVISED
as complying with the Florida Building Code
NOA-No. 20-1123.17
Expiration Date 01/30/2024
By Isaac I. Chanh
Miami-Dade Product Control

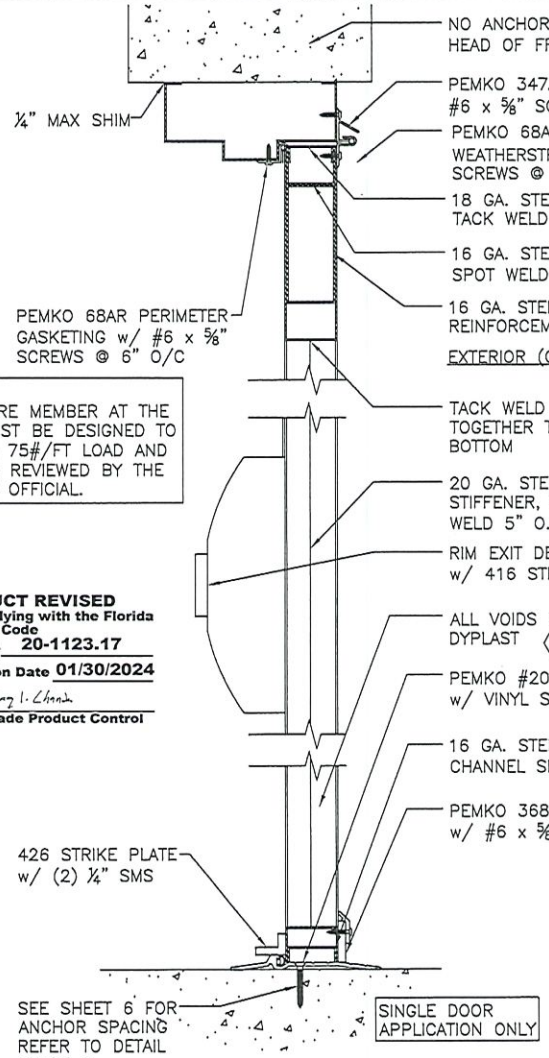

VERTICAL SECTION N7

CODY C. DAVIS
LICENSE
No. 75154
STATE OF FLORIDA
3/3/21
PROFESSIONAL ENGINEER

CODY DAVIS, P.E.
FLORIDA LIC. # 75154
(NOT VALID WITHOUT SEAL)

16 GA. COMMERCIAL OUTSWING STEEL DOOR

4506 QUALITY LANE
TAMPA, FLORIDA 33634
(813) 885-1693

Quality Engineered Products Co., Inc.

REVISIONS
- –
- –
3 01-26-06
4 02-26-16
5 02-15-21(FBC2020)

DRAWING NUMBER 16GACOSD-1

HURRICANE TEST APPROVAL
SERIES 16GACOSD
16 GAUGE COMMERCIAL
OUTSWING STEEL DOORS

SHEET 7 OF 10

DATE 02-15-21

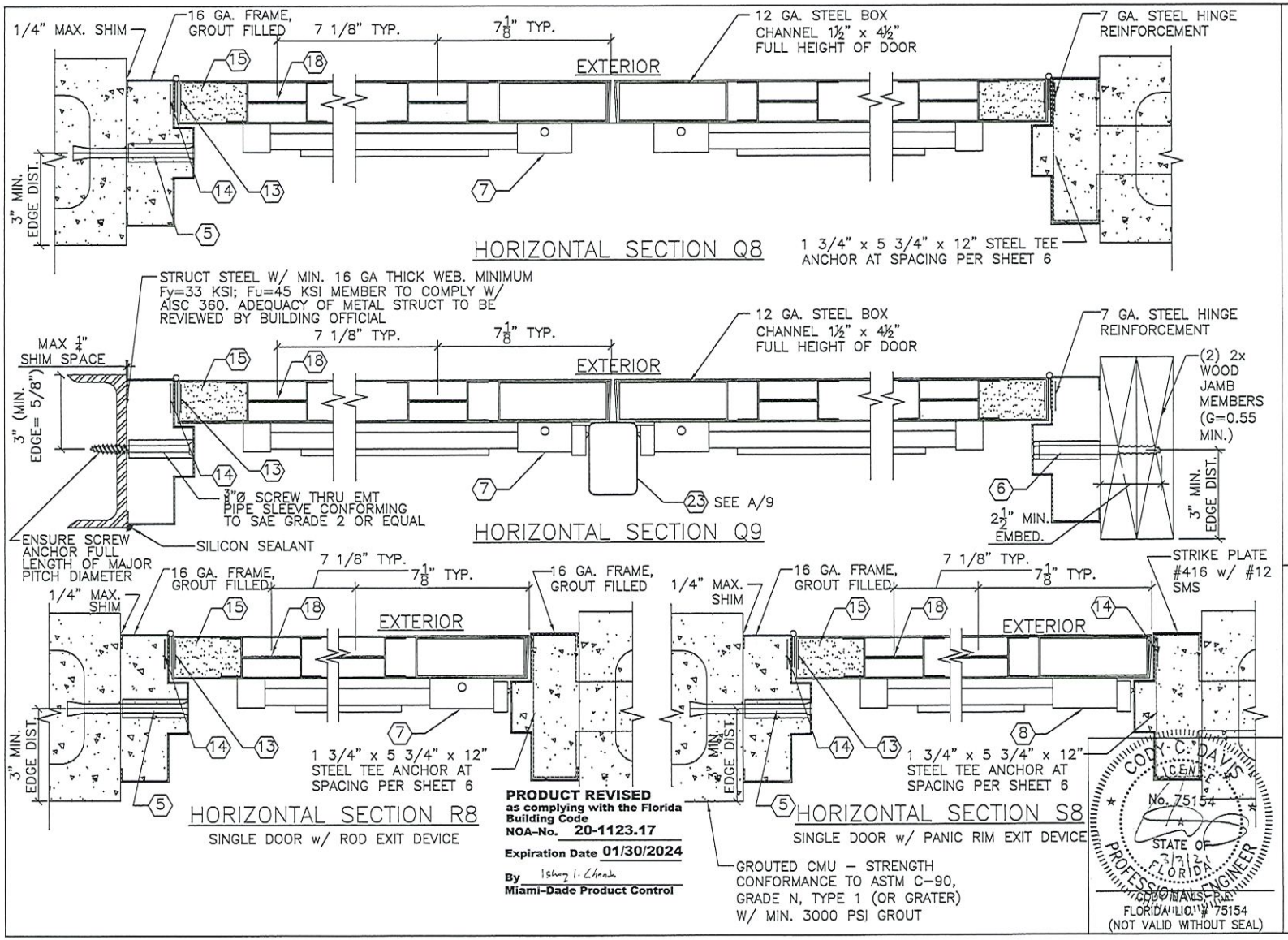

4506 QUALITY LANE
TAMPA, FLORIDA 33634
(813) 885-1693

Quality Engineered Products Co., Inc.

16 GA. COMMERCIAL OUTSWING STEEL DOOR

REVISIONS
- –
- –
3 01-26-06
4 02-26-16
5 02-15-21(FBC2020)

DRAWING NUMBER 16GACOSD-1

HURRICANE TEST APPROVAL
SERIES 16GACOSD
16 GAUGE COMMERCIAL
OUTSWING STEEL DOORS

SHEET 8 OF 10

DATE 02-15-21

PRODUCT REVISED
as complying with the Florida Building Code
NOA-No. 20-1123.17
Expiration Date 01/30/2024
By Ishwar I. Chand
Miami-Dade Product Control

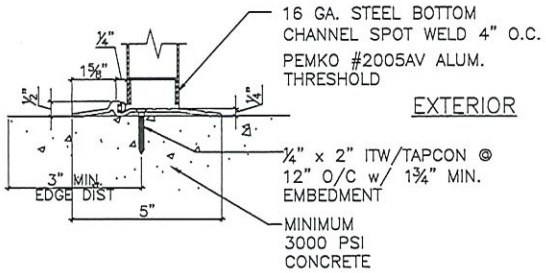

THRESHOLD INSTALLATION

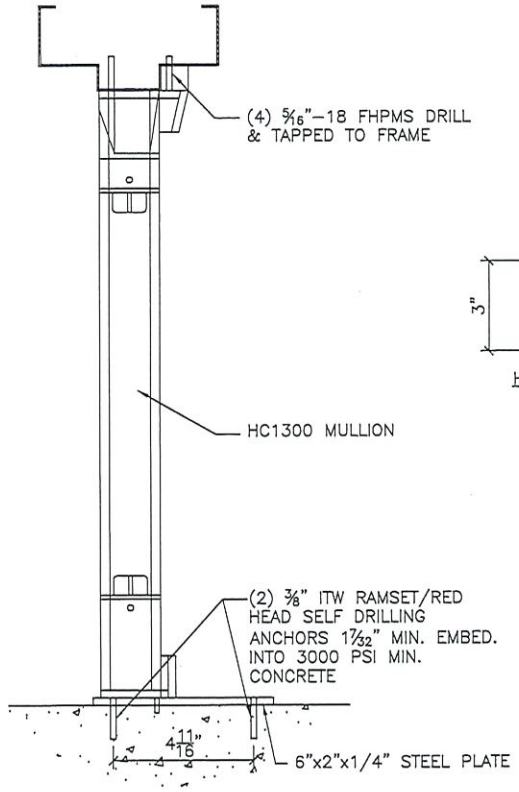

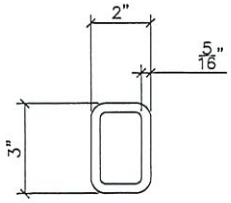

HC1300 MULLION

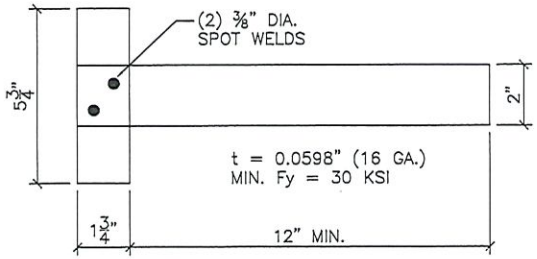

ALT T ANCHOR ATTACHMENT

DORMA HC-1300 REMOVABLE MULLION

CODY C. DAVIS
LICENSE No. 75154
STATE OF FLORIDA
PROFESSIONAL ENGINEER
3/3/2
CODY C. DAVIS, P.E.
FLORIDA LIC. # 75154
(NOT VALID WITHOUT SEAL)

16 GA. COMMERCIAL OUTSWING STEEL DOOR

4506 QUALITY LANE
TAMPA, FLORIDA 33634
(813) 885-1693
Quality Engineered Products Co., Inc.

REVISIONS
1 –
2 –
3 01-26-06
4 02-26-16
5 02-15-21(FBC2020)

DRAWING NUMBER 16GACOSD-1

HURRICANE TEST APPROVAL
SERIES 16GACOSD
16 GAUGE COMMERCIAL
OUTSWING STEEL DOORS

SHEET 9 OF 10

DATE 02-15-21

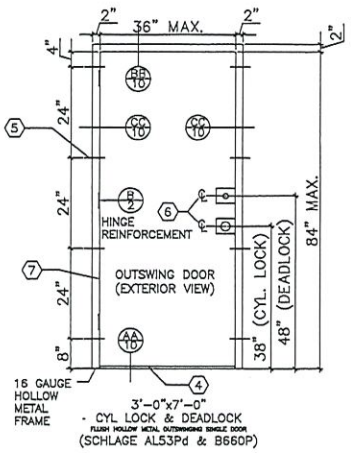

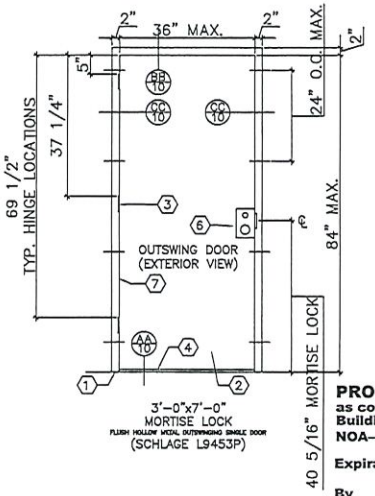

PRODUCT REVISED
as complying with the Florida Building Code
NOA-No. 20-1123.17
Expiration Date 01/30/2024
By Ishay I. Chanin
Miami-Dade Product Control

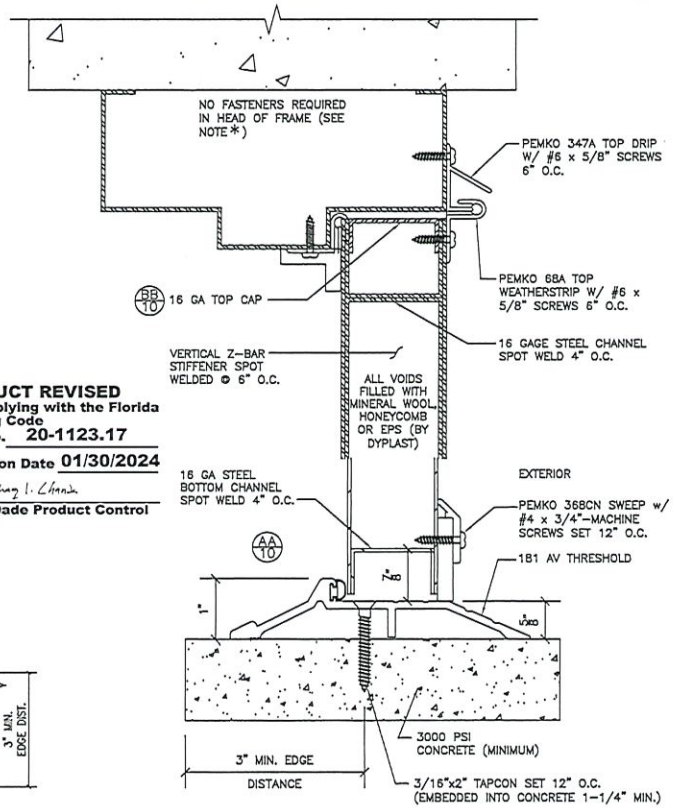

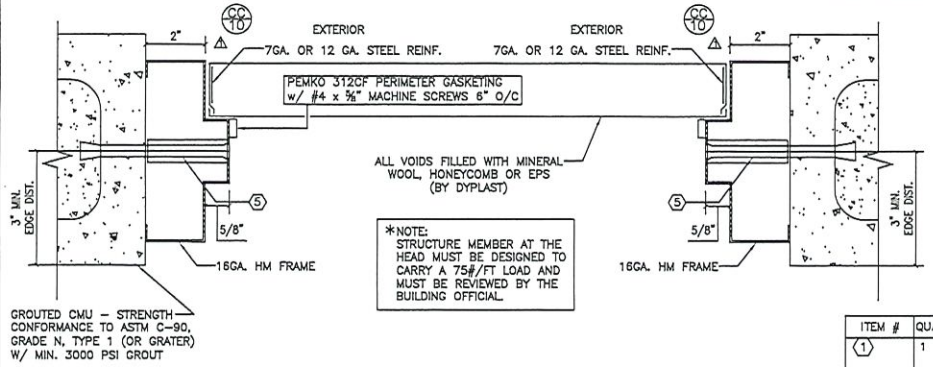

*NOTE:
STRUCTURE MEMBER AT THE HEAD MUST BE DESIGNED TO CARRY A 75#/FT LOAD AND MUST BE REVIEWED BY THE BUILDING OFFICIAL.

DESIGN PRESSURE RATING - OUTSWING SINGLE DOOR (7'-0" MAX.)		
	WHERE AIR & WATER INFILTRATION REQUIREMENT IS NEEDED	WHERE AIR & WATER INFILTRATION REQUIREMENT NOT IS NEEDED
POSITIVE	+90 PSF	+90 PSF
NEGATIVE	-90 PSF	-90 PSF

ITEM #	QUANTITY	BILL OF MATERIALS
1	1	16 GA. (.063") MIN. (14 GA. MAX.) STEEL HOLLOW METAL FRAME FyMIN= 46.3 KSI; FuMIN= 52.1 KSI (OR S.S. MEETING FyMIN= 50.5 KSI; FuMIN= 98.5 KSI)
2	1	18 GA. (0.05") MIN. (14 GA. MAX.) STEEL FLUSH DOOR FyMIN= 46.3 KSI; FuMIN= 52.1 KSI (OR S.S. MEETING FyMIN= 50.5 KSI; FuMIN= 98.5 KSI)
3	3	HAGER HINGES BB1279 4½" X 4½" .134" THICK
4	1	PEMKO THRESHOLD 181AV OR 2005AV
5	8	¾"Ø DYNABOLT ITW/REDHEAD SLEEVE ANCHOR (⅜"Ø BOLT) X 5" SLEEVE ANCHOR w/ ¾"Ø EMT WELDED PIPE SLEEVE w/ 2-1/2" MIN. EMBEDMENT & 3" MIN. EDGE DISTANCE INTO 3 KSI CONCRETE OR GROUT FILLED BLOCK
6	1	SCHLAGE LOCKSET AL53Pd W/ DEADLOCK B660 OR SCHLAGE MORTISE LOCKSET L9453Pd
7	AS REQ.	PEMKO 312CF PERIMETER GASKETING
8	1	PEMKO 368CN DOOR SWEEP
9	1	#347A X 68A TOP DRIP

CODY C. DAVIS
LICENSE
No. 75154
STATE OF FLORIDA
3/2/21
PROFESSIONAL ENGINEER

CODY DAVIS, P.E.
FLORIDA LIC. # 75154
(NOT VALID WITHOUT SEAL)

16 GA. COMMERCIAL OUTSWING STEEL DOOR

4506 QUALITY LANE
TAMPA, FLORIDA 33634
(813) 885-1693

Quality Engineered Products Co., Inc.

REVISIONS
- -
- -
3 01-26-06
4 02-26-16
5 02-15-21(FBC2020)

DRAWING NUMBER 16GACOSD-1

HURRICANE TEST APPROVAL
SERIES 16GACOSD
16 GAUGE COMMERCIAL
OUTSWING STEEL DOORS

SHEET 10 OF 10

DATE 02-15-21